Features

- 0603 with integrated LED driver IC.
- Single line data transmission (return to zero code).
- Specific Shaping Transmit Technology - theoretically the number of cascaded LEDs is not restricted, but in practice the cascade length is limited by refresh-rate, power-distribution and signal-integrity requirements.
- Data transfer frequency can reach 800kbps. When there's 1024 LEDs in a single string, the refresh rate can reach 30 frames per second.
- Capacitor between VDD and GND is not needed.
- Built-in power supply reverse connects protection module, reversed power input will not damage the IC.

Description

The IN-PIS63BTPG is 1.6*0.8*0.55mm Green color LED with integrated IC. It is a SMD type LED which can be used in various applications.

Applications

- LED color module
- LED guardrail tube
- LED scene lighting
- LED point light
- LED pixel screen
- LED shaped screen

Package Outline Dimensions & Pin Configuration

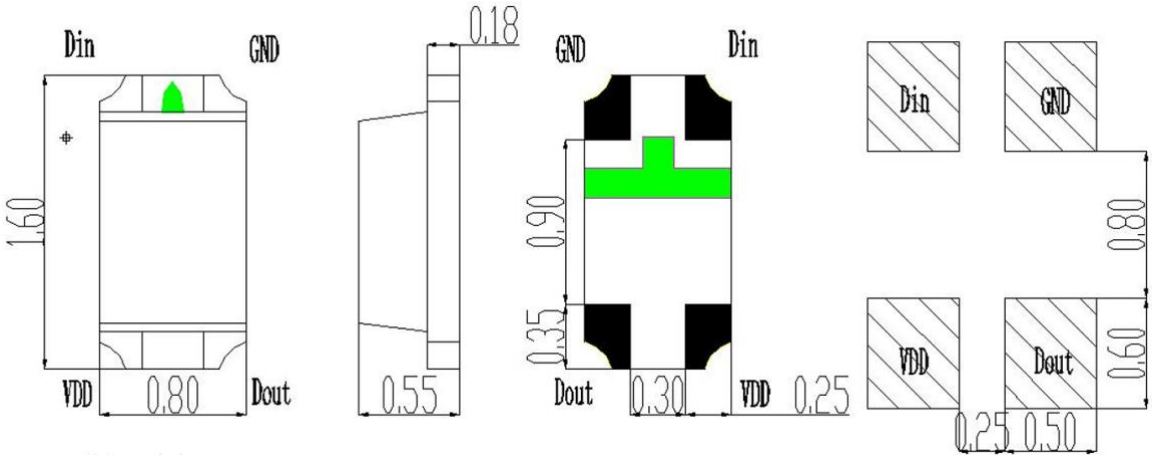

Figure 1. IN-PIS63BTPG Package Outline Dimensions

Note:

All dimensions are in millimeters.

Tolerance is ± 0.10mm unless otherwise noted.

Pin Configuration

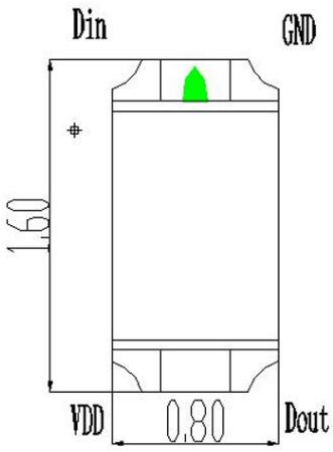

Figure 2. IN-PIS63BTPG Pin Configuration

Notes:
1. Dimensions are in millimeters, tolerance is ±0.1mm unless otherwise noted.

Symbol	Function Description
GND	Ground
DOUT	Control data signal output
DIN	Control data signal input
VDD	Power supply

Absolute Maximum Rating *(Ta = 25 ℃)*

Parameter	Symbol	Range	Unit
Power supply voltage	V_{DD}	3.0～+5.5	V
Logical input voltage	V_{IN}	-0.5 ~ 5.5	V
OUT voltage	V_{OUT}	9	V
Operating temperature	T_{OPT}	−30 ~ +85	°C
Storage temperature	T_{STG}	−40 ~ +90	°C
Soldering Condition	Tsol	Reflow soldering: 260°C, 10s	
		Hand soldering: 300°C, 3s	

LED Characteristics *(Ta = 25℃, @12mA)*

Parameter	Symbol	Color	Min.	Typ.	Max	Unit	Test Condition
Luminous Intensity	IV	Green	-	520	-	mcd	12mA
Dominant Wavelength	λd	Green	515	-	530	nm	12mA
Peak Wavelength	λp	Green	-	521	-	nm	12mA
Spectral Line Half-Width	Δλ	Green	-	31	-	nm	12mA
Viewing Angle	2θ1/2	-	-	120	-	deg	12mA

Recommended Operating Ranges *(unless otherwise specified, Ta= 25 ℃)*

Parameter	Symbol	Min.	Typ.	Max	Unit	Test conditions
Input voltage	V_{DD}	3.0	5.0	5.5	V	-
High level input voltage	V_{IH}	0.7*VDD	0.9*VDD	VDD	V	DIN High level
Low level input voltage	V_{IL}	0	0.1*VDD	0.3*VDD	V	DIN Low level
DOUT sourcing current	IDO		15		mA	VDD=5V，VDO=1V
DOUT sink current	IDO		30		mA	VDD=5V，VDO=1V
The frequency of PWM	F_{PWM}	3	4	5	kHz	-
Static Supply Current	I_{DD}	0.4	0.65	0.9	mA	VDD=4.5V Iout" OFF"

Switching Characteristics

Parameter	Symbol	Min.	Typ.	Max	Unit	Test conditions
DOUT transmission delay	t_{PZL}	-	-	200	ns	DIN → DOUT
The speed of data transmission	fDIN	-	-	1100	KHZ	
I_{OUT} Rise/Fall Time	T_r	-	-	400	ns	Vds=1.5V I_O = 12mA,
	T_f	-	-	400	ns	

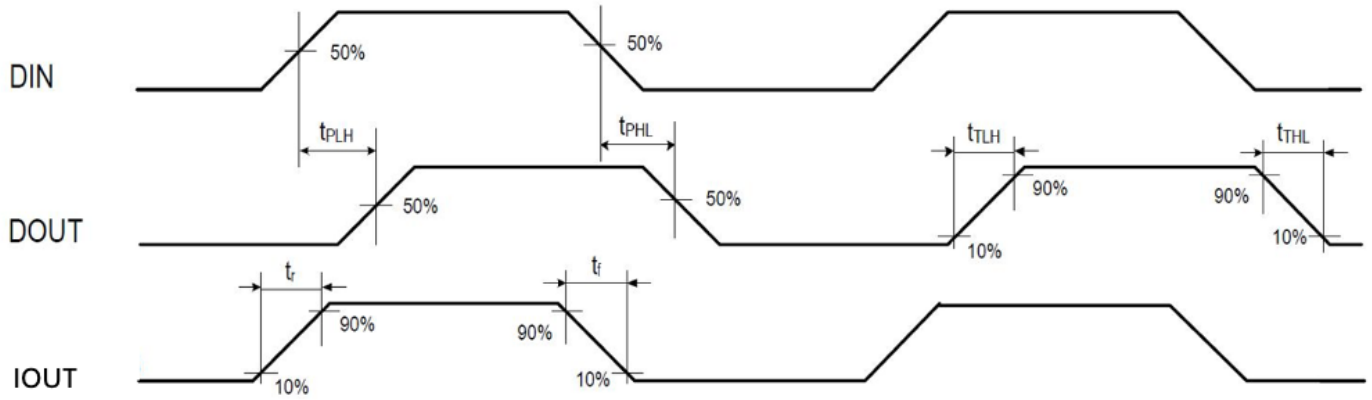

Timing Waveforms

1. Input Code

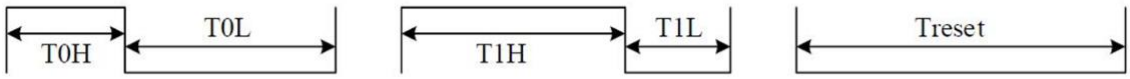

0 1 RESET

2. The data transmission time:

Name	Description	Min.	Typ.	Max.	Unit
T0H	0 code, high level time	0.2	0.3	0.36	μs
T0L	0 code, low level time	0.54	0.95	2.0	μs
T1H	1 code, high level time	0.54	0.6	0.7	μs
T1L	1 code, low level time	0.3	0.65	2.0	μs
Trst	Reset code, low level time	80	-	-	μs

3. Connection Scheme

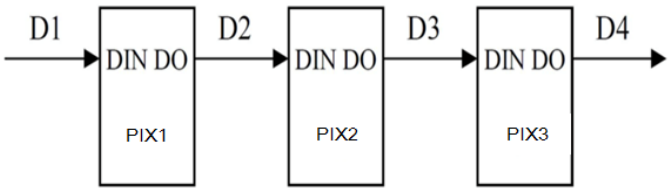

4. Data Transfer Format

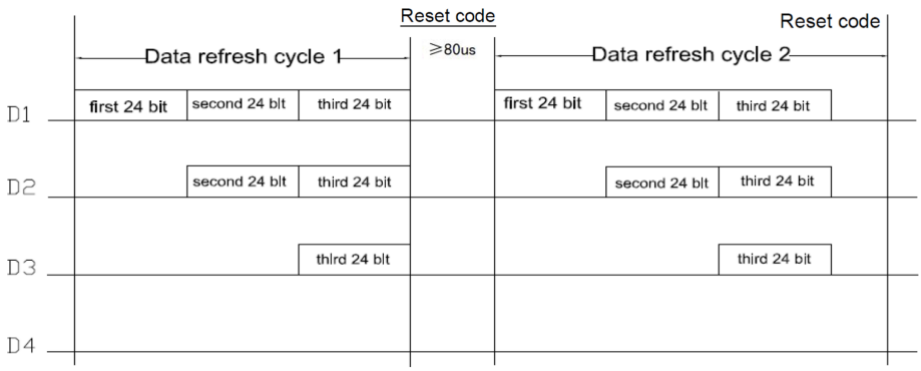

Note: The data at D1 is sent by MCU, and D2, D3, through IC internal reshaping amplification to transmit.

5. 24 bits grayscale data structure: high-order bit first, send data in the order of G

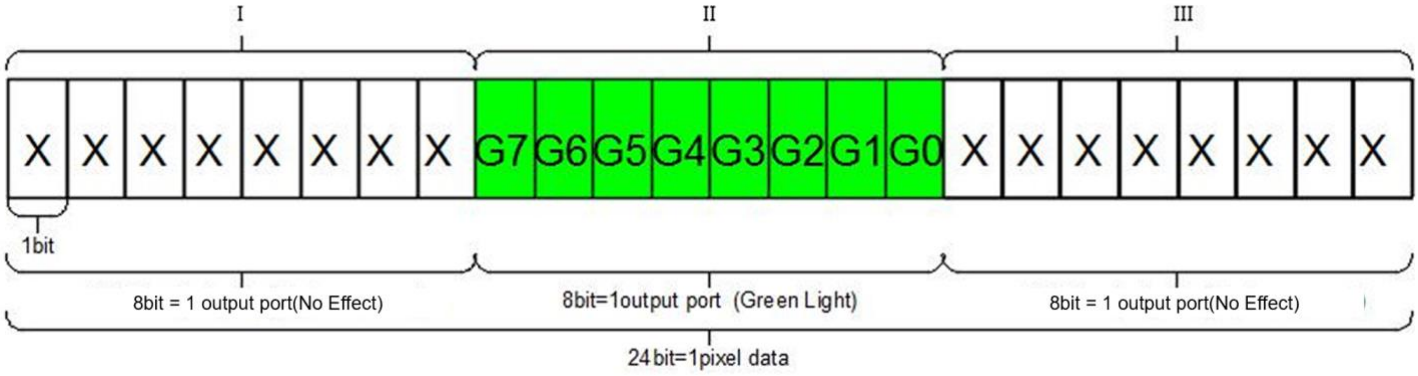

The driver IC used in the LED utilizes single-wire communication protocol and uses return-to-zero (RZ) method to send signals. After the driver IC is powered on and resets, it receives data from the DIN terminal. After receiving enough data (24 bits), the DOUT port begins to forward next 24 bits data to provide input data for the next LED. Before forwarding signal to the next LED, the DOUT port is always pulled at low level. At this time, the driver IC chip will retain the 24 bits data received and will not receive new input data; once DIN receives “RESET signal”, the corresponding internal port for the green LED die will send out internal signals based on the received 8 bits of 24 bits data (middle 8 bits) to the green LED die - and the LED turns on. The LED internal signal PWM frequency is set at 4 kHz, and the data transmission speed is set at 800 kbps.

*Only when DIN receives input signal of “RESET signal”, the driver IC will begin to display the data received (LED On). The LED will then begin to receive new data-stream after the previous data-stream ends. After receiving the next first 24 bits data, it will forward the next set of data through the DOUT port. The LED will maintain the original display output before receiving the “Reset Signal”. Only after receiving the low-level RESET code of ≥80μs low, the driver IC will send the updated internal signal of the 8 bits of 24 bits data (middle 8 bits) to the green LED for updated LED on.

Typical Application Circuit

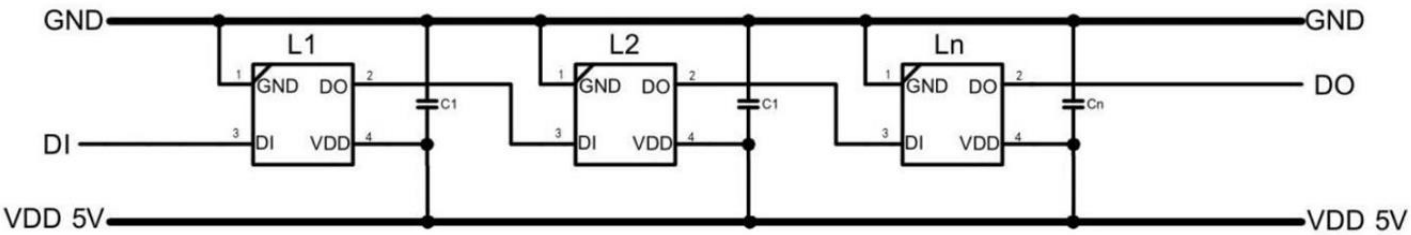

Note: C1 is the optional filter capacitor of LED VDD pin, the general value is 100nF.

LED Performance Graph

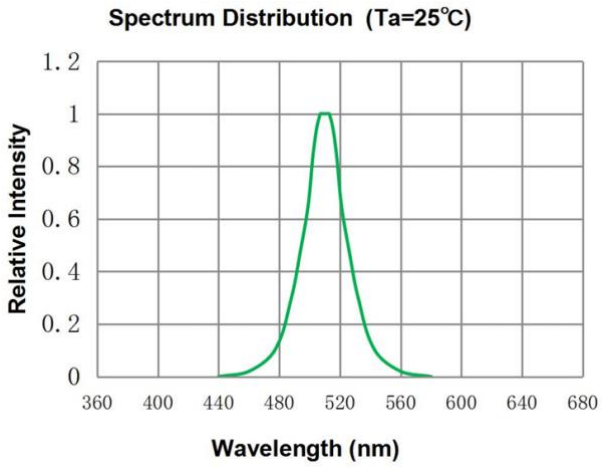

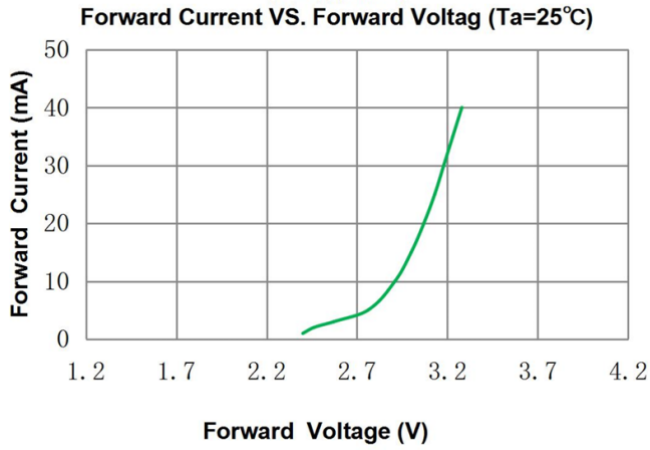

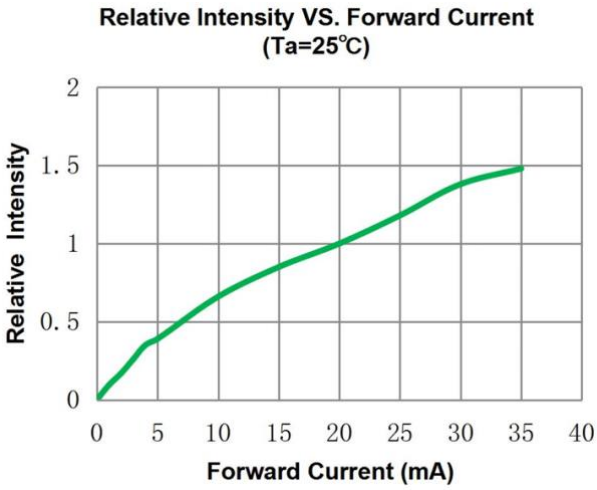

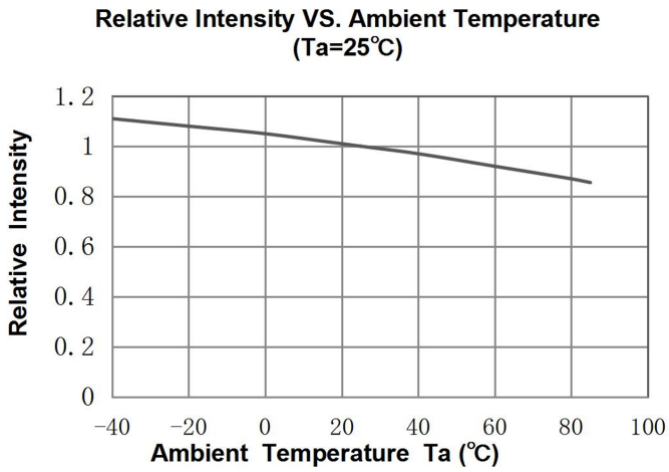

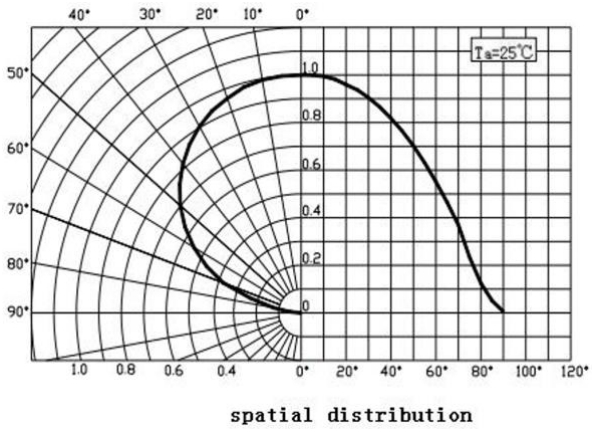

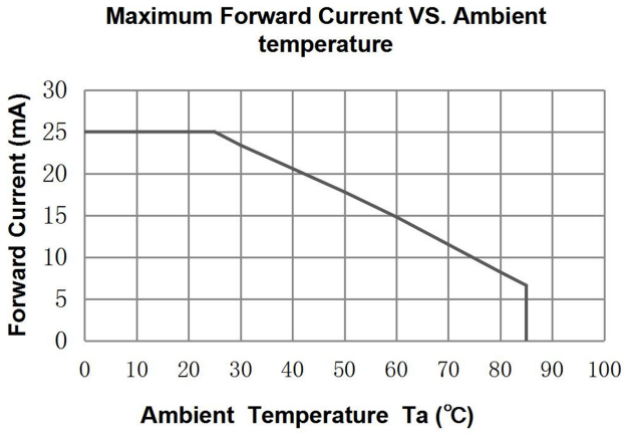

Ordering Information

Orderable Part Number	Emission Color	IV(mcd)
IN-PIS63BTPG	Green	520

Label Specifications

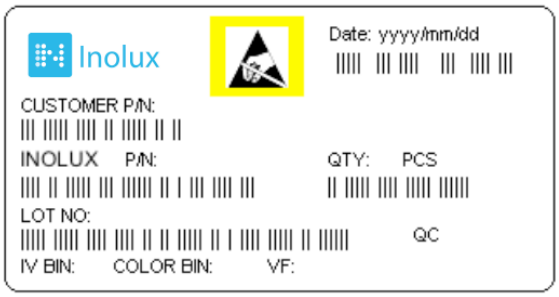

Inolux P/N:

I	N	-	PIS	63	B	T	P	G	-	X	X	X	X
Inolux		-	Product	Package	Variation	Orientation	Current	Color		Customized Stamp-off			
		-	PI- Single trace IC S: PCB type	63B = 1.6 x 0.8 x 0.55 mm (4 pins)		T = Top Mount	P=12mA	G = 525 nm					

Lot No.:

Z	2	0	1	7	01	24	001
Internal Tracker	Year (2017, 2018, ...)				Month	Date	Serial

Packaging

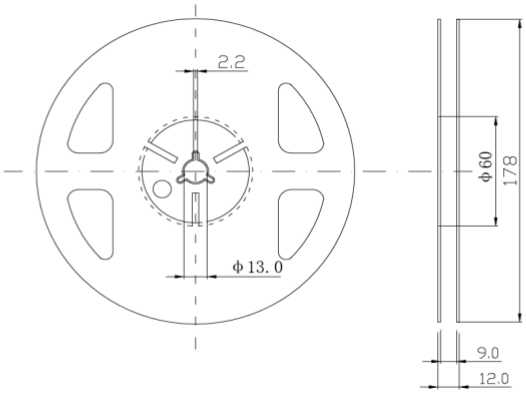

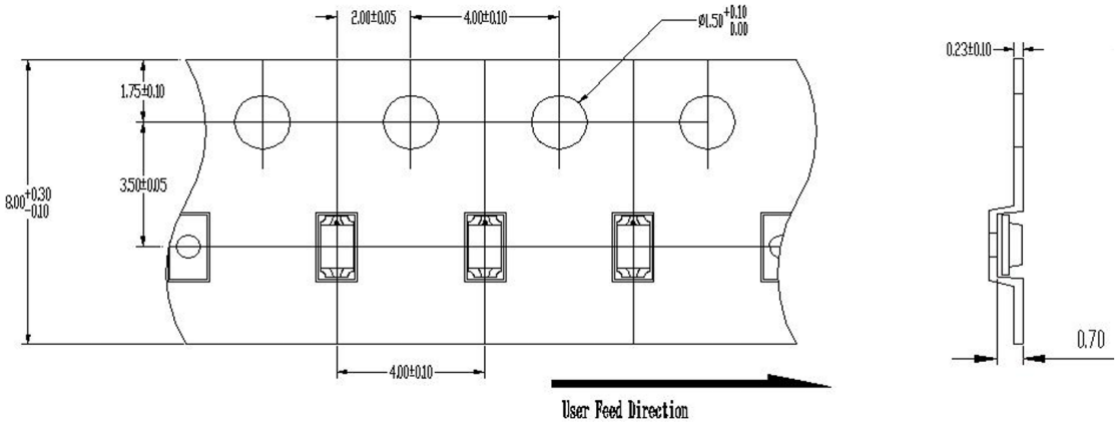

1. All dimensions are in millimeters.
2. Tolerance is ±0.1 mm unless otherwise noted.

- 4kpcs/reel

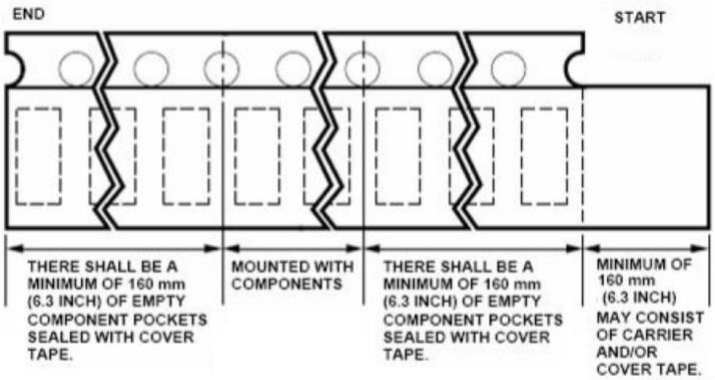

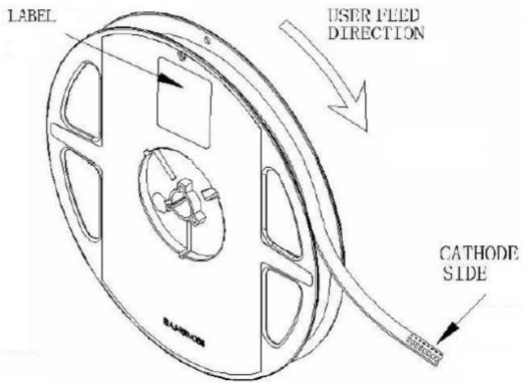

Precautions

Please read the following notes before using the product:

1. Storage

1.1 Do not open moisture proof bag before the products are ready to use.

1.2 Before opening the package, the LEDs should be kept at 30℃ or less and 80%RH or less.

1.3 The LEDs should be used within a year.

1.4 After opening the package, the LEDs should be kept at 30℃ or less and 60%RH or less.

1.5 The LEDs should be used within 168 hours after opening the package.

1.6 If the moisture adsorbent material has evaporated or the LEDs have exceeded the storage time, baking treatment should be performed using the following conditions. Baking treatment: 60±5℃ for 24 hours.

2. Soldering Condition

Recommended soldering conditions:

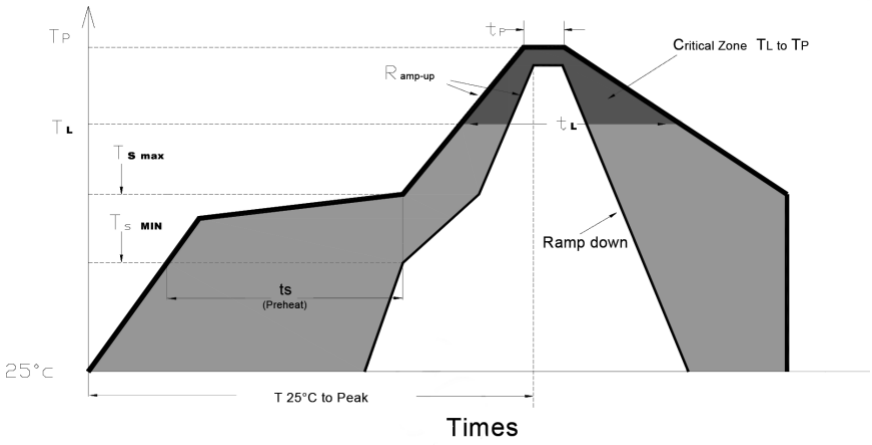

Profile Feature	Lead-Free Solder
Average Ramp-Up Rate (Ts_{max} to Tp)	3℃/second max.
Preheat: Temperature Min (Ts_{min})	150℃
Preheat: Temperature Max (Ts_{max})	200℃
Preheat: Time (ts_{min} to ts_{max})	60-180 seconds
Time Maintained Above: Temperature (T_L)	217 ℃
Time Maintained Above: Time (t_L)	60-150 seconds
Peak/Classification Temperature (T_P)	240 ℃
Time Within 5℃ of Actual Peak Temperature (tp)	<10 seconds
Ramp-Down Rate	6℃/second max.
Time 25 ℃ to Peak Temperature	<6 minutes max.

Note: Excessive soldering temperature and / or time might result in deformation of the LED lens or catastrophic failure of the LED.

3. Soldering Iron

Each terminal is to go to the tip of soldering iron temperature less than 260℃ for 5 seconds within once in less than the soldering iron capacity 25W. Leave two seconds and more intervals and do soldering of each terminal. Be careful because the damage of the product is often started at the time of the hand solder.

4. Repairing

Repair should not be done after the LEDs have been soldered. When repairing is unavoidable, a double-head soldering iron should be used (as below figure). It should be confirmed beforehand whether the characteristics of the LEDs will or will not be damaged by repairing.

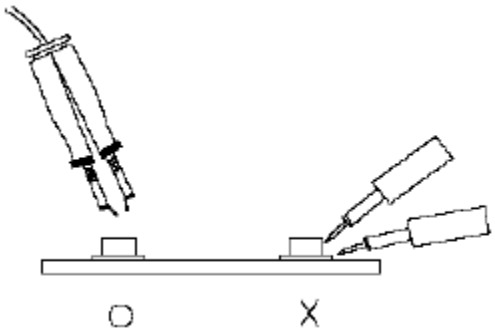

5. Caution in ESD

Static Electricity and surge damage the LED. It is recommended to use a wristband or anti-electrostatic glove when handling the LED. All devices, equipment and machinery must be properly grounded.

Revision History

Changes since last revision	Page	Version No.	Revision Date
Initial Release		1.0	03-15-2024
Revise the drawing	7	1.1	05-06-2024
Revise the wording	11	1.2	10-15-2024
Format adjustment	3	1.3	09-28-2026

DISCLAIMER

INOLUX reserves the right to make changes without further notice to any products herein to improve reliability, function or design. INOLUX does not assume any liability arising out of the application or use of any product or circuit described herein; neither does it convey any license under its patent rights, nor the rights of others.

LIFE SUPPORT POLICY

INOLUX's products are not authorized for use as critical components in life support devices or systems without the express written approval of the President of INOLUX or INOLUX CORPORATION. As used herein:
1. Life support devices or systems are devices or systems which, (a) are intended for surgical implant into the body, or (b) support or sustain life, and (c) whose failure to perform when properly used in accordance with instructions for use provided in the labeling, can be reasonably expected to result in a significant injury of the user.
2. A critical component in any component of a life support device or system whose failure to perform can be reasonably expected to cause the failure of the life support device or system, or to affect its safety or effectiveness.