Featured

- 1204 package (3.2 x 1.2 x 1.85mm) reverse-mount SMD LED
- High brightness output
- AlInGaP and InGaN chip technology
- Compact package size
- High reliability performance
- Clear lens configuration

Applications

- Consumer electronics
- Wearables
- Automobile aftermarket
- Industrial equipment

Description

The IN-S124BR series is a popular 1204 package with reverse mount and versatile design capabilities. It is a PCB type molding style LED which can be used in various applications.

Recommended Solder Pattern

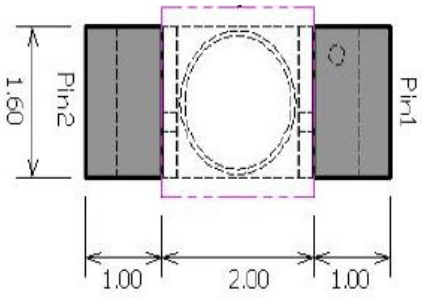

Package Dimensions in mm

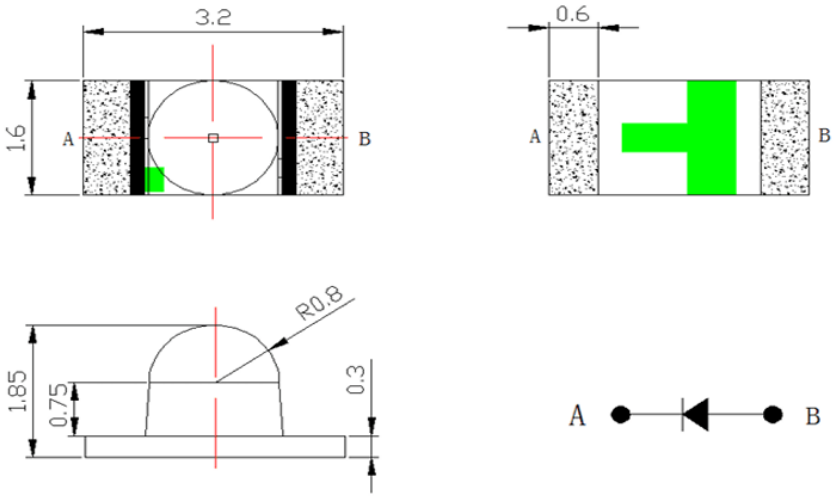

Notes.
1. All dimensions are in millimeters.
2. Tolerance is ± 0.10 mm unless otherwise noted

Absolute Maximum Rating $T_A = 25℃$ (Note)

Product	Emission Color	P_d (mW)	I_F (mA)	I_{FP}* (mA)	V_R (V)	T_{OP} (°C)	T_{ST} (°C)
IN-S124BRYG	Yellow Green	48	20	30	5	-40°C~+80°C	-40°C~+100°C
IN-S124BRY	Yellow						
IN-S124BRA	Amber						
IN-S124BRR	Red						
IN-S124BRB	Blue	78	20	60			
IN-S124BRG	Green						
IN-S124BRUW	White						

Note
1. Condition for IFP is pulse of 1/10 duty and 0.1msec width

ESD Precaution

ATTENTION: Electrostatic Discharge (ESD) protection



The symbol above denotes that ESD precaution is needed. ESD protection for GaP and AlGaAs based chips is necessary even though they are relatively safe in the presence of low static-electric discharge. Parts built with AlInGaP, GaN, or/and InGaN based chips are STATIC SENSITIVE devices. ESD precaution must be taken during design and assembly.
If manual work or processing is needed, please ensure the device is adequately protected from ESD during the process.

Please be advised that normal static precautions should be taken in the handling and assembly of this device to prevent damage or degradation which may be induced by electrostatic discharge (ESD).

Electrical Characteristics T_A = 25℃ (Note)

Product	Emission Color	I_F(mA)	V_F(V)		λ(nm)			Viewing Angle (°)	IV(mcd)
			typ.	max	λ_D	λ_P	△λ	2θ1/2	typ.
IN-S124BRYG	Yellow Green	20	2.1	2.4	571	573	15	20	715.0
IN-S124BRY	Yellow	20	2.0	2.4	589	591	20	20	1125.0
IN-S124BRA	Amber	20	2.0	2.4	605	609	17	20	1800.0
IN-S124BRR	Red	20	2.0	2.4	624	632	20	20	900.0
IN-S124BRB	Blue	20	3.3	3.9	470	468	40	20	715.0
IN-S124BRG	Green	20	3.3	3.9	525	520	30	20	1440.0
IN-S124BRUW	White	20	3.3	3.9	X=0.29 Y=0.29	-	-	120	715.0

Note

1. Performance guaranteed only under conditions listed in above tables.

Chromaticity Bin (for White only)

	Rank C1			
x	0.2500	0.2700	0.2700	0.2500
y	0.2500	0.2775	0.2325	0.2050

	Rank C2			
x	0.2700	0.2900	0.2900	0.2700
y	0.2775	0.3050	0.2600	0.2325

	Rank D1			
x	0.2900	0.3100	0.3100	0.2900
y	0.3050	0.3325	0.2875	0.2600

	Rank D2			
x	0.3100	0.3300	0.3300	0.3100
y	0.3325	0.3600	0.3150	0.2875

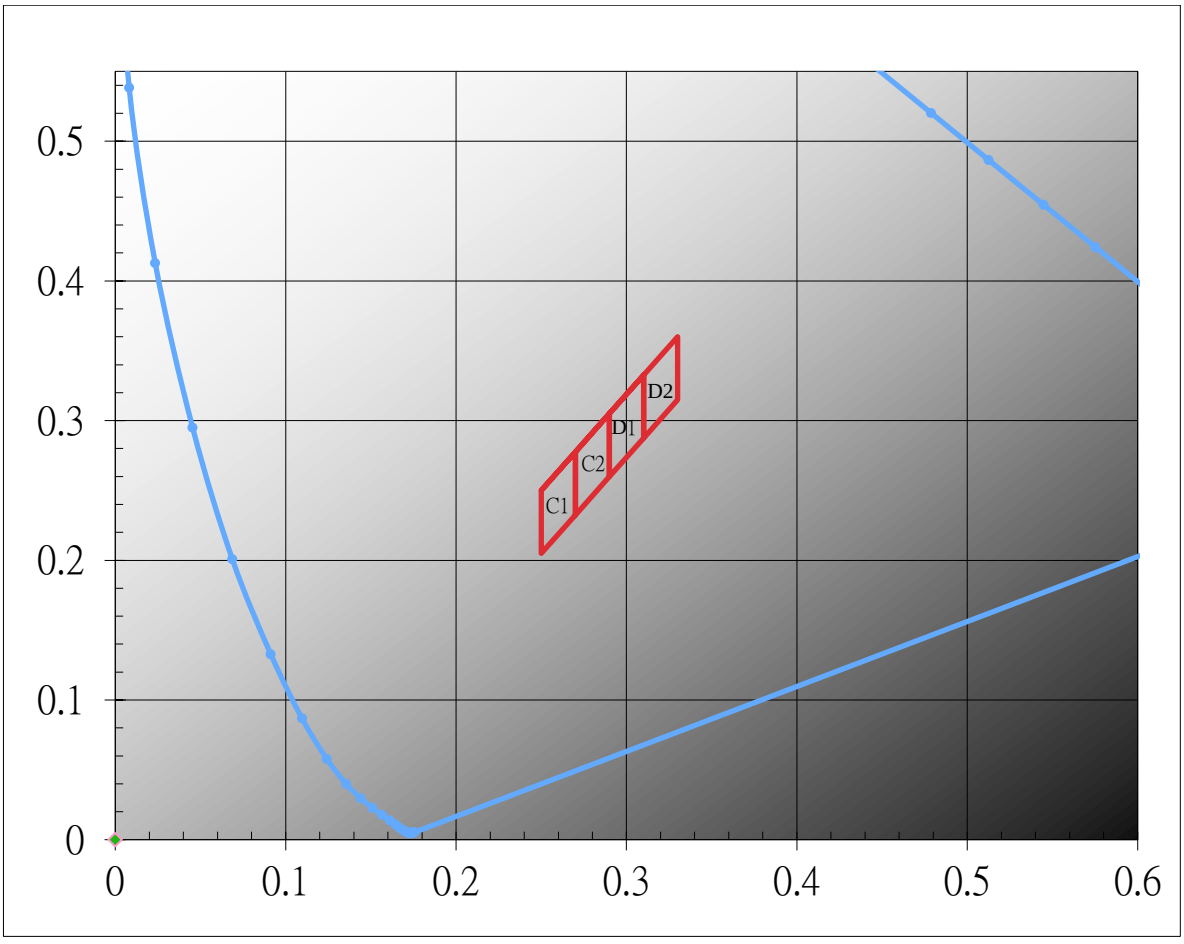

Typical Characteristic Curves – YG, Y, A, R

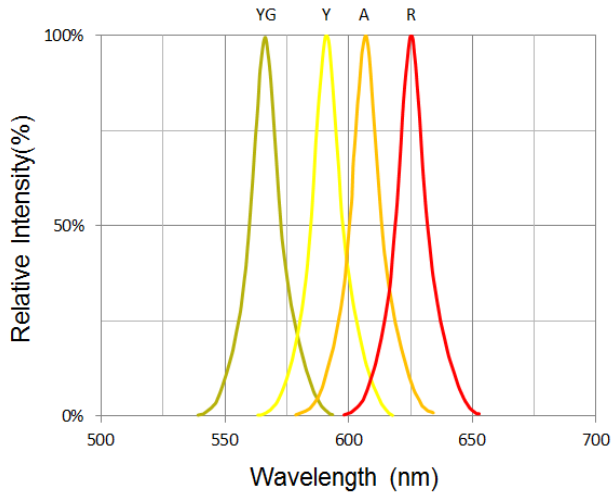

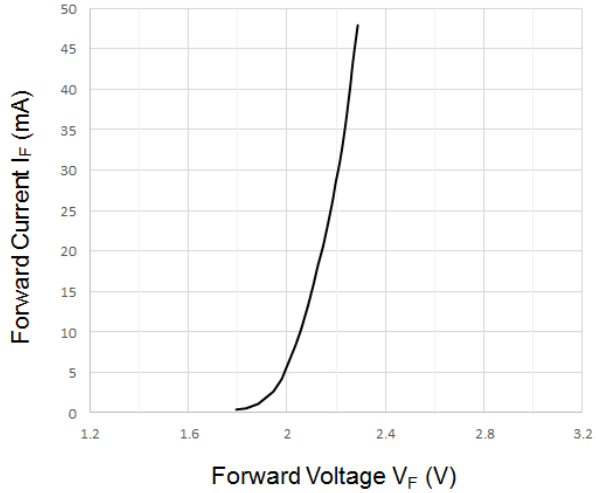

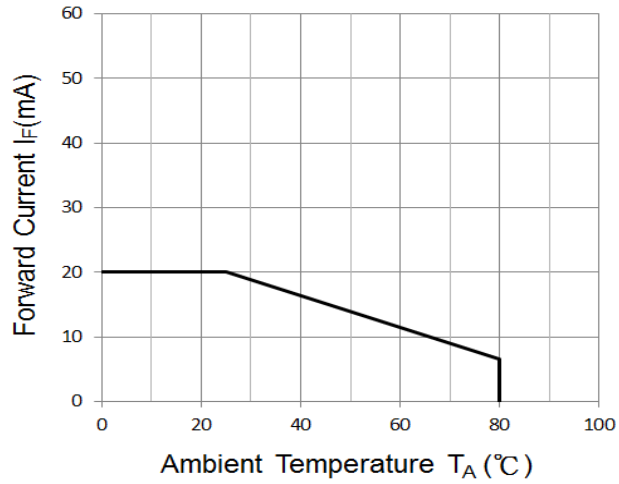

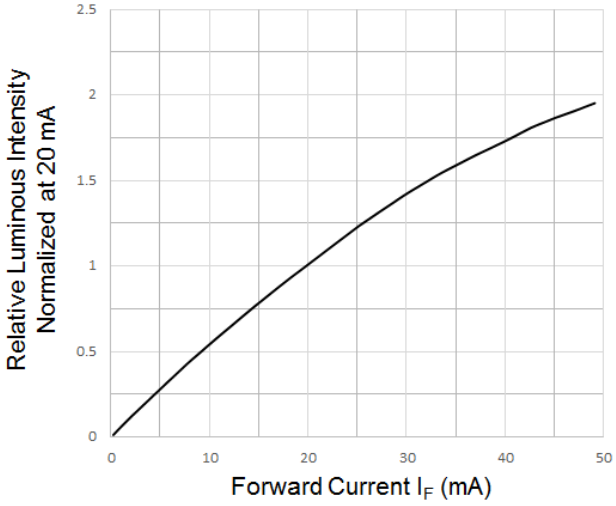

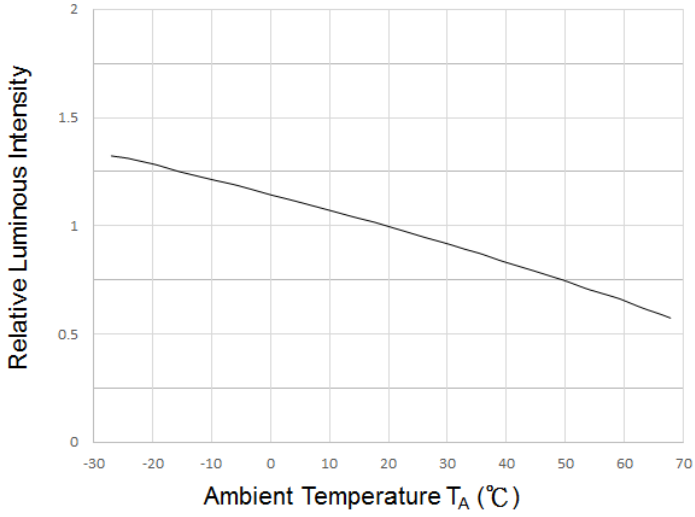

Typical Characteristic Curves – B, G, W

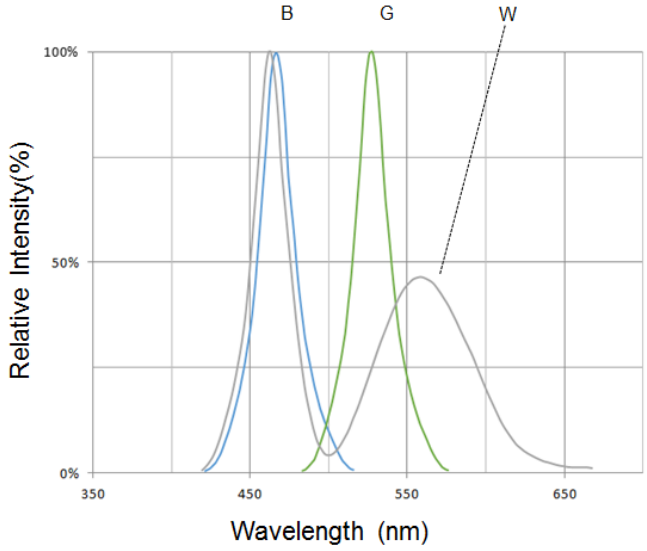

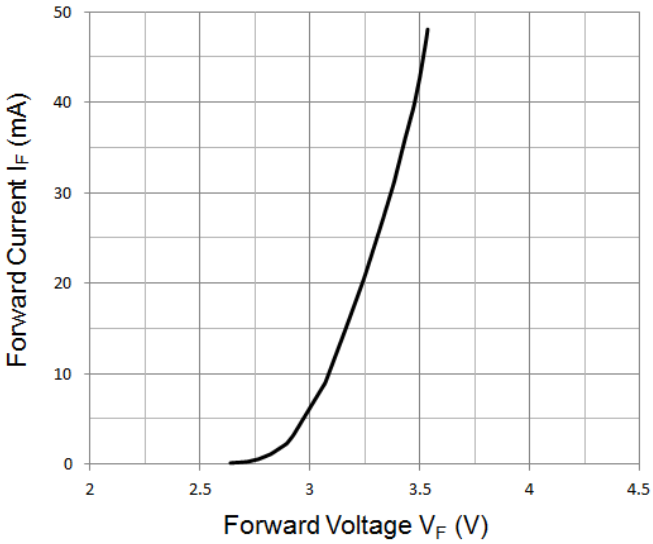

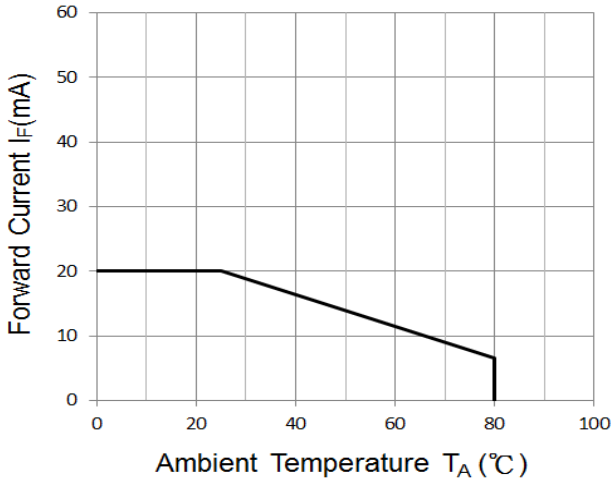

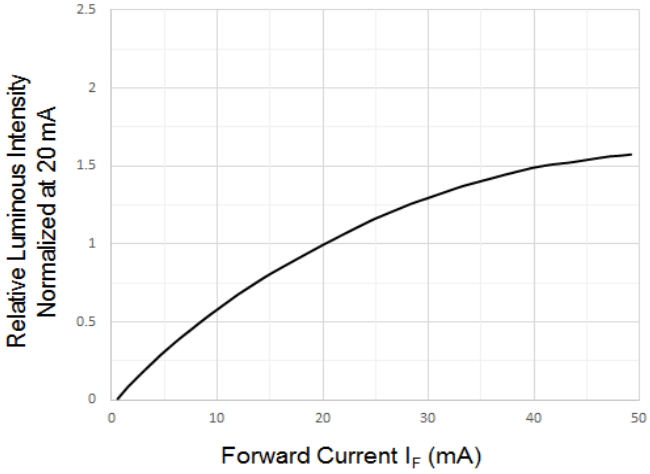

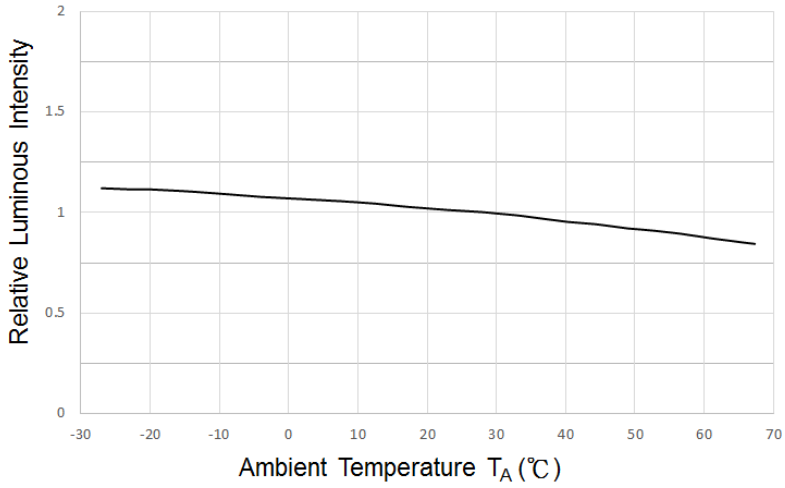

Typical Characteristic Curves – Radiation Pattern

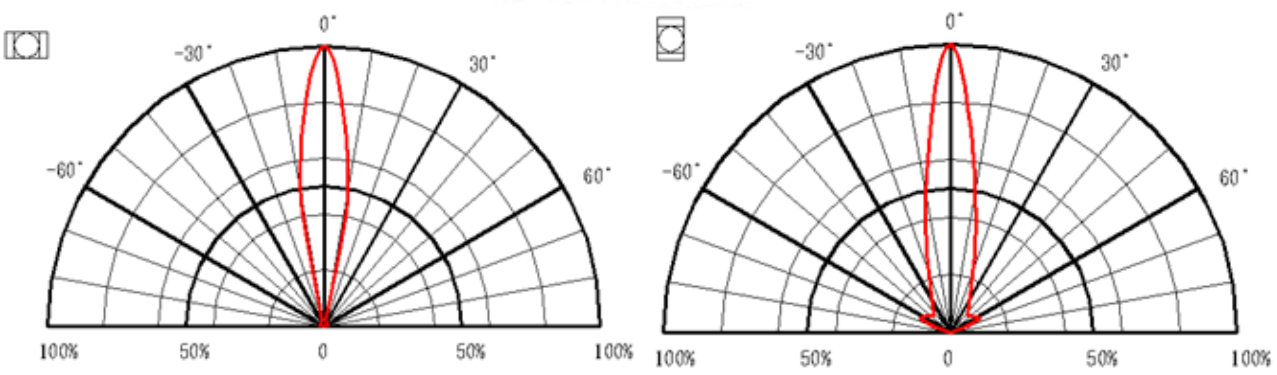

Ordering Information

Orderable Part Number	Emission Color	Technology	Test Current I_F (mA)	Luminous Intensity IV (mcd) (Typ.)	Forward Voltage V_F (V) (Typ.)
IN-S124BRYG	Yellow Green	AlInGaP	20	715.0	2.1
IN-S124BRY	Yellow	AlInGaP	20	1125.0	2.0
IN-S124BRA	Amber	AlInGaP	20	1800.0	2.0
IN-S124BRR	Red	AlInGaP	20	900.0	2.0
IN-S124BRB	Blue	InGaN	20	715.0	3.3
IN-S124BRG	Green	InGaN	20	1440.0	3.3
IN-S124BRUW	White	InGaN	20	715.0	3.3

Label Specifications

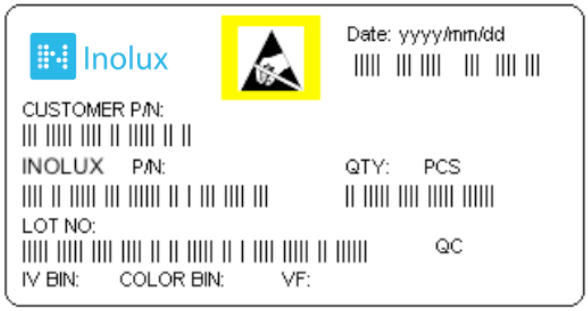

Inolux P/N:

I	N	-	S	1	2	4	B	R			X	-	X	X	X	X
			Material	Package			Variation	Orientation	Current	Lens	Color		Customized Stamp-off			
Inolux SMD			S = PCB Type	124B = 3.2 x 1.6 x 1.85mm				R = Reverse Mount	(Blank) = 20mA	(Blank) = Clear U = Diffused	R=624nm A=605nm Y=589nm YG=571nm G=525nm B=470nm W=White					

Lot No.:

Z	2	0	1	7	01	24	001
Internal Tracker	Year (2017, 2018, …..)				Month	Date	Serial

Packaging Information: 2000pcs Per Reel

Tape Dimension

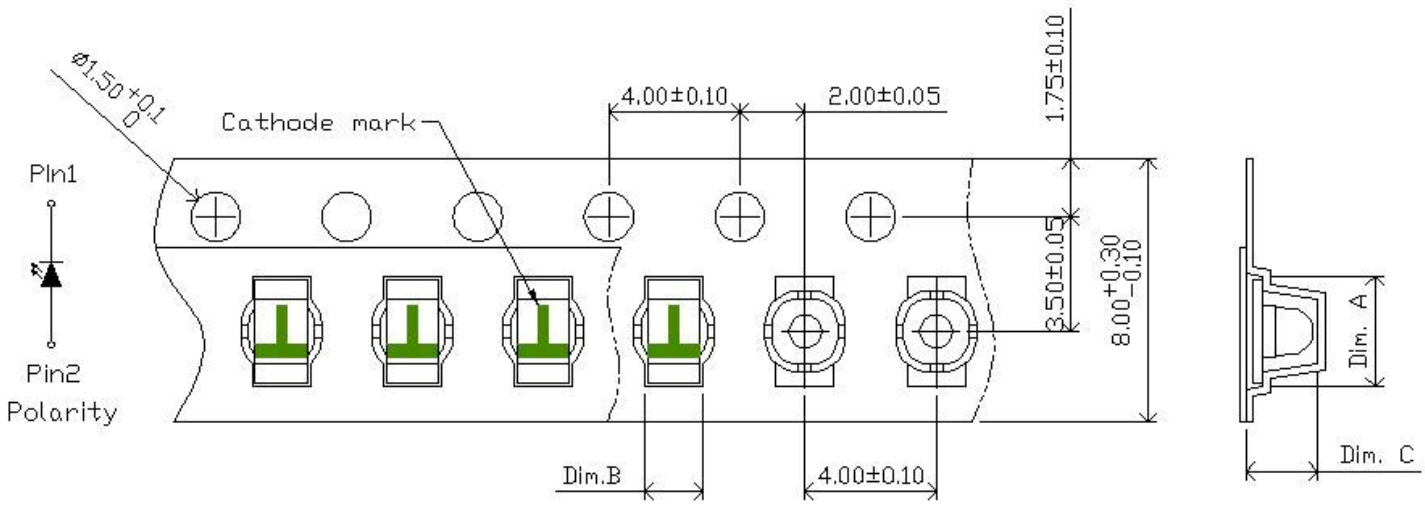

Part No.	Dim. A	Dim. B	Dim. C	Q'ty/Reel
IN-S124BR	3.37±0.10	1.78±0.10	2.17±0.10	2K

Unit: mm

Reel Dimension

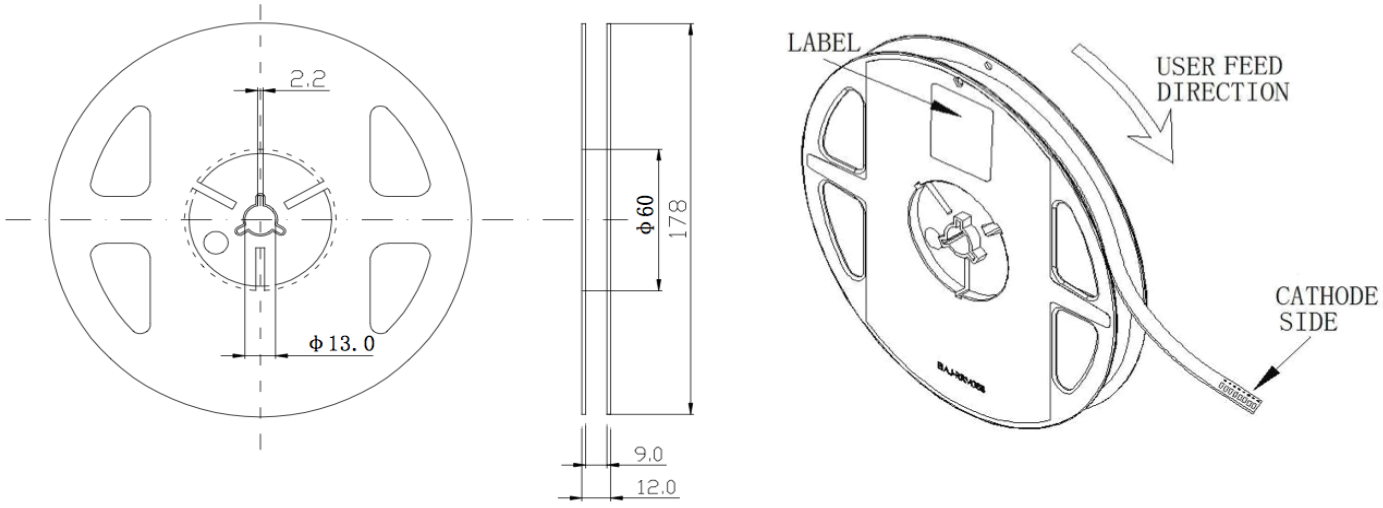

Packing Dimension

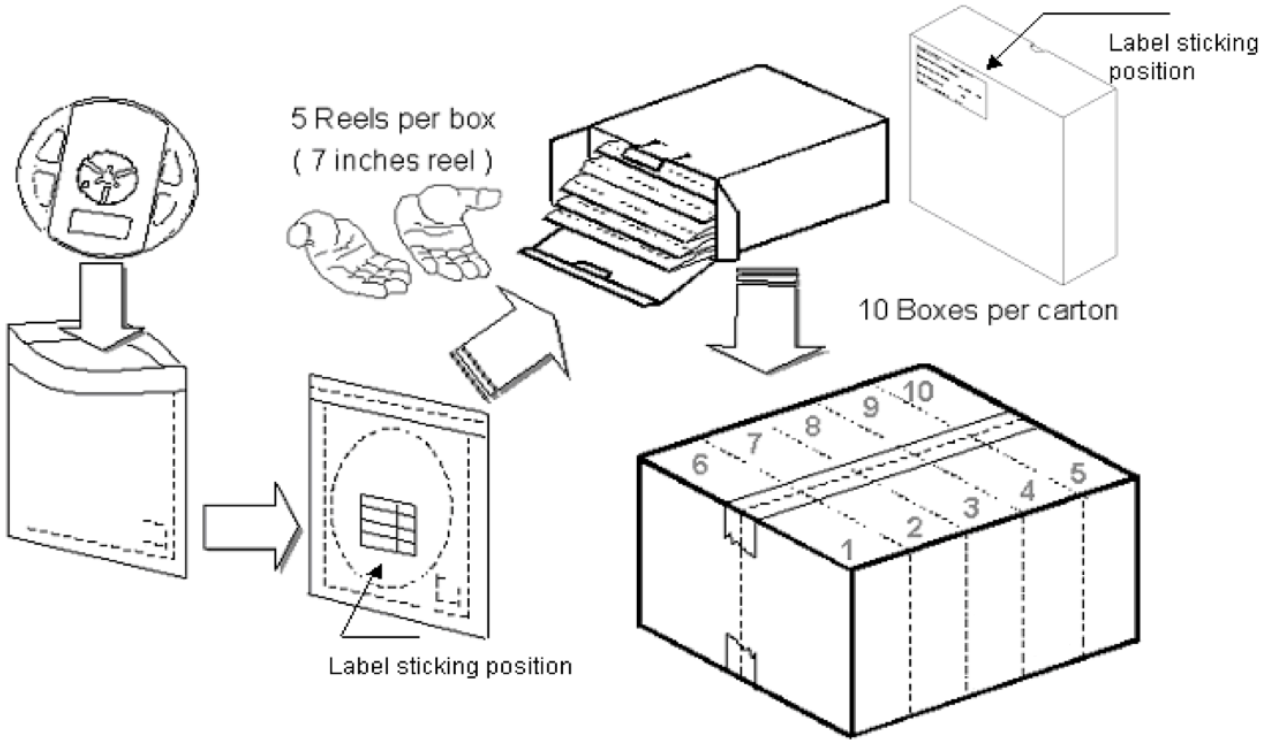

5 boxes per carton are available depending on shipment quantity.

	Specification	Material	Quantity
Carrier tape	Per EIA 481-1A specs	Conductive black tape	2000pcs per reel
Reel	Per EIA 481-1A specs	Conductive black	
Label	Standard	Paper	
Packing bag	220x240mm	Aluminum laminated bag/ no-zipper	One reel per bag
Carton	Standard	Paper	Non-specified
Others: Each immediate box consists of 5 reels. The 5 reels may not necessarily have the same lot number or the same bin combinations of Iv, λ_D and Vf. Each reel has a label identifying its specification; the immediate box consists of a product label as well.			

Dry Pack

All SMD optical devices are **MOISTURE SENSITIVE**. Avoid exposure to moisture at all times during transportation or storage. Every reel is packaged in a moisture protected anti-static bag. Each bag is properly sealed prior to shipment.

Upon request, a humidity indicator will be included in the moisture protected anti-static bag prior to shipment.

The packaging sequence is as follows:

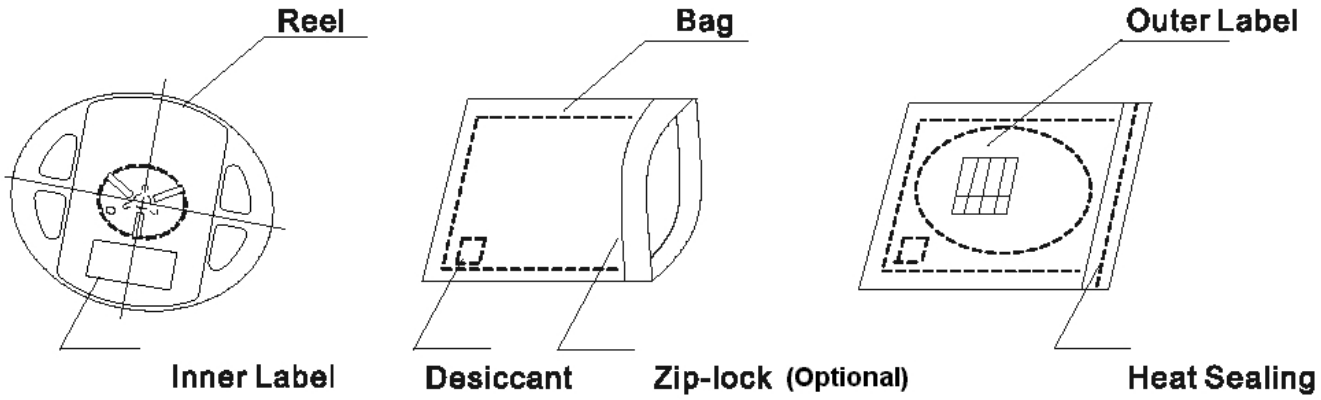

Reflow Soldering

- Recommended solder paste specifications: melting temperature in the range of 180-200ºC.
- The recommended reflow soldering profile is as follows (temperatures indicated are as measured on the surface of the LED resin):

Lead-free Solder Profile

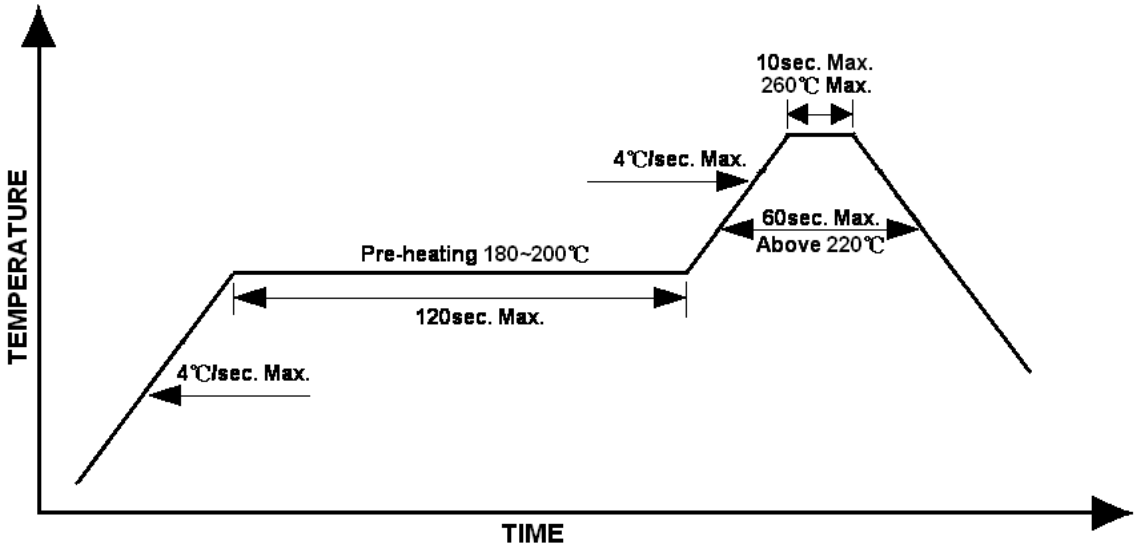

Precautions

- Avoid exposure to moisture at all times during transportation or storage.
- Anti-Static precaution must be taken when handling GaN, InGaN, and AlInGaP products.
- It is suggested to connect the unit with a current limiting resistor of the proper size. Avoid applying a reverse voltage.
- Avoid operation beyond the limits as specified by the absolute maximum ratings.
- Avoid direct contact with the surface through which the LED emits light.
- If possible, assemble the unit in a clean room or dust-free environment.

Reworking

- Rework should be completed within 5 seconds under 260 °C.
- The iron tip must not come in contact with the copper foil.
- Twin-head type is preferred.

Cleaning

Following are cleaning procedures after soldering:

- An alcohol-based solvent such as isopropyl alcohol (IPA) is recommended.
- Temperature x Time should be 50°C x 30sec. or <30°C x 3min.
- Ultra sonic cleaning: < 15W/ bath; bath volume ≤ 1liter.
- Curing: 100 °C max, <3min.

Cautions of Pick and Place

- Avoid stress on the resin at elevated temperature.
- Avoid rubbing or scraping the resin by any object.
- Electro-static may cause damage to the component. Please ensure that the equipment is properly grounded. Use of an ionizer fan is recommended.

Revision History

Changes since last revision	Page	Version No.	Revision Date
Initial Release		1.0	04-10-2017
Updated (PCN)	1	1.1	12-03-2025
Updated	3	1.2	10-26-2026

DISCLAIMER

INOLUX reserves the right to make changes without further notice to any products herein to improve reliability, function or design. INOLUX does not assume any liability arising out of the application or use of any product or circuit described herein; neither does it convey any license under its patent rights, nor the rights of others.

LIFE SUPPORT POLICY

INOLUX's products are not authorized for use as critical components in life support devices or systems without the express written approval of the President of INOLUX or INOLUX CORPORATION. As used herein:
1. Life support devices or systems are devices or systems which, (a) are intended for surgical implant into the body, or (b) support or sustain life, and (c) whose failure to perform when properly used in accordance with instructions for use provided in the labeling, can be reasonably expected to result in a significant injury of the user.
2. A critical component in any component of a life support device or system whose failure to perform can be reasonably expected to cause the failure of the life support device or system, or to affect its safety or effectiveness.